B21

GLASS WASHER - BASKET 400 x 400 mm



PRODUCT DESCRIPTION

100% STAINLESS STEEL
Stainless steel structure AISI 304. Double-skinned door.
Stainless steel coplanar rotating arms for easy cleaning.
Electro-mechanic functioning.
Standard equipped with built-in rinse aid dispenser for the best drying results.
Standard equipped with built-in connection for detergent dispenser.
Standard equipped with built-in connection for drain pump.
Standard equipped with two baskets for glasses.
Extremely easy to use: in addition to the ON/OFF switch, this model is characterized by just one push-button. So, it stands for the right glass washer even for untrained users and extremely hectic bars and pubs.
Classy interface with chromed buttons. LED lamps are more visible than standard to better control the machine also from far away.



TECHNICAL SPECIFICATIONS

Width: 470 mm
Depth: 530 mm
Height: 700 mm
Volume: 0.13 m³
Rack dimensions: 400x400 mm
Useful height: 290
Working cycles: 120 sec
Electrical power: 3.25 kW
Electric power: 230 V/1/50-60 Hz
Racks/Hour: 30



Viale del Progresso, 20 Z.I. 35026 Conselve (PD) - Italia
P.I. e C.F IT01897630289 | TEL: (+39) 049 95 00 555 | FAX: (+39) 049 95 00 560

B21

DATI TECNICI / CARACTERISTIQUES TECHNIQUES / TECHNICAL SPECIFICATIONS / TECHNISCHE DATEN / CARACTERISTICAS TECNICAS / ТЕХНИЧЕСКИЕ ХАРАКТЕРИСТИКИ

PRODUZIONE ORARIA (CESTI) / DÉBIT PANIERS-H / BASKETS PER HOUR / KÖRBE PRO STUNDE / RENDIMIENTO HORARIO / ЧАСОВАЯ ПРОИЗ-СТЬ (КОРЗИНКИ)		30
CICLO DI LAVORO / CYCLE DE LAVAGE / WASHING CYCLE / SPÜLPROGRAMM / CICLO DE LAVADO / ЦИКЛ РАБОТЫ	[sec] [сек]	120
ALTEZZA UTILE MM - HAUTEUR UTILISABLE JUSQU'À MM - USABLE HEIGHT UP TO MM - BENUTZBARE HÖHE BIS MM - ALTURA UTILIZABLE HASTA MM - НОЛЕЗНАЯ ВЫСОТА MM		290
ALIMENTAZIONE ELETTRICA / ALIMENTATION ÉLECTRIQUE / ELECTRIC FEEDING / ELEKTRISCHER ANSCHLUSS / ALIMENTACION ELECTRICA / ЭЛЕКТРОПИТАНИЕ	[V]	230/1
	[HZ] - [ГЦ]	50/60
POTENZA ELETTRICA / PUISSANCE ÉLECTRIQUE / ELECTRIC POWER /ELEKTRO-LEISTUNG /ЭЛЕКТР.	[KW] - [КВТ]	3,25
RESISTENZA BOILER / RÉSISTANCE SURCHAUFFEUR / BOILER HEATING ELEMENT / BOILERHEIZUNG / RESISTENCIA CALENTADOR / НАГРЕВАТЕЛВ БОЙЛЕРА	[KW] - [КВТ]	2,5
TANK HEATING ELEMENT / RESISTENZA VASCA / RÉSISTANCE CUVE / TANKHEIZUNG / RESISTENCIA TANQUE / НАГРЕВАТЕЛВ ЕМКОСТИ	[KW] - [КВТ]	0,5
POTENZA POMPA LAVAGGIO VENTILATA / PUISSANCE POMPE DE LAVAGE VENTILÉE / VENTILATED WASHING PUMP / BELÜFTETE WASCHPUMPE / BOMBA DE LAVADO / МОЩНОСТВ НАСОСА МОЙКИ ВЕНТ.	[KW] - [КВТ]	0,24
CAPACITÀ VASCA / CAPACITÉ CUVE / TANK CAPACITY / TANKINHALT / CAPACIDAD TANQUE / ОБЪЕМ ЕМКОСТИ	[L] [л]	10
CAPACITÀ BOILER / CAPACITÉ SURCHAUFFEUR / BOILER CAPACITY / BOILERINHALT / CAPACIDAD CALENTADOR / ОБЪЕМ БОЙЛЕРА	[L] [л]	2,5
PRESSIONE ACQUA DI RISCIACQUO / PRESSION EAU DE RINÇAGE / RINSE WATER PRESSURE / NACHSPÜLWASSERDRUCK / PRESION AGUA DE ACLARADO / ДАВЛЕНИЕ ВОДЫ ПРИ ОПОЛАСКИВАНИИ	bar	2 ÷ 4
DUREZZA ACQUA / DURETÉ EAU / WATER HARDNESS / WASSERHÄRTE / DUREZA DE AGUA / МЕСТКОСТВ ВОДЫ	°F	8 ÷ 14
TEMPERATURA MASSIMA ACQUA IN INGRESSO / TEMPERATURE MAX. EAU REMPLISSAGE / MAX. TEMPERATURE OF WATER SUPPLY / MAX. TEMPERATUR ZUFLUSSWASSER / TEMPERADURA MAXIMA AGUA ENTRADA / МАКС.ТЕМПЕРАТУРА ВОДЫ НА ВХОДЕ	°C	50
CONSUMO ACQUA PER CICLO / QUANTITÉ D'EAU PAR CYCLE / WATER CONSUMPTION PER CYCLE / WASSERVERBRAUCH PRO ZYKLUS / CANTIDAD AGUA POR CICLO / ПОТРЕБЛЕНИЕ ВОДЫ ЗА ЦИКЛ	[L] [л]	1,75

Standard

CESTO BASE / PANIER BASE / BASIC BASKET / UNIVERSALKORB / CESTO BASE / БАЗОВАЯ КОРЗИНА	2 x 7290	
DIMENSIONI CESTO / DIMENSIONS PANIER / BASKET DIMENSIONS / KORBMASSE / DIMENSIONES CESTA / ЦИКЛ РАБОТЫ	[mm]	400x400
CESTO POSATE / PANIER POUR COUVERTS / CUTLERY BASKET / BESTECKKORB / CUBILITE PARA CUBIERTOS / КОРЗИНА ДЛЯ СТОЛОВЫХ ПРИБОРОВ	1 x 1091	

Optional

DOSATORE DETERSIVO PERISTALTICO - DOSEUR DETERGENT PERISTALTIQUE - PERISTALTIC DETERGENT DISPENSER - PERISTALTIK-REINIGERDOSIERPUMPE - DOSIFICADOR DETERGENTE PERISTÁLTICO - ПЕРИСТАЛЬТИЧЕСКИЙ ДОЗАТОР МОЮЩЕГО СРЕДСТВА	A5695	
KIT DOSATORE DETERSIVO PERISTALTICO - KIT DOSEUR DÉTERGENT PÉRISTALTIQUE - PERISTALTIC DETERGENT DISPENSER KIT - PERISTALTIK-DOSIERPUMPENSATZ - KIT DOSFICADOR DETERGENTE PERISTÁLTICO - СОМНЛЕКТ НЕРЎСТАЛЬТЎЕСКОRО ДОЗАТОРА МОЮЩЕRО СРЕДСТВА	B5695	
INSERTO CESTO TONDO - INSERT PANIER ROND - INSERT FOR ROUND BASKET - EINSATZ FÜR RUNDEN KORB -SOPORTE PARA CESTA REDONDA - ВСТАВКА ДЛЯ КРYRЛО̨ КОРЗЎНЫ	7228	
POMPA DI SCARICO - POMPE DE VIDANGE - DRAIN PUMP - LAUGENPUMPE - BOMBA DE VACIADO - СЛИВНОЙ НАСОС	A4728/21	
KIT POMPA DI SCARICO - KIT POMPE DE VIDANGE - DRAIN PUMP KIT – LAUGENPUMPENSATZ - KIT BOMBA DE DESAGUE - СОМНЛЕКТ СЛЎВНОRО НАСОСА	B4728/21	

DIMENSIONI / DIMENSIONS / DIMENSIONS / MAßE / MEDIDAS / РАЗМЕРЫ

B21

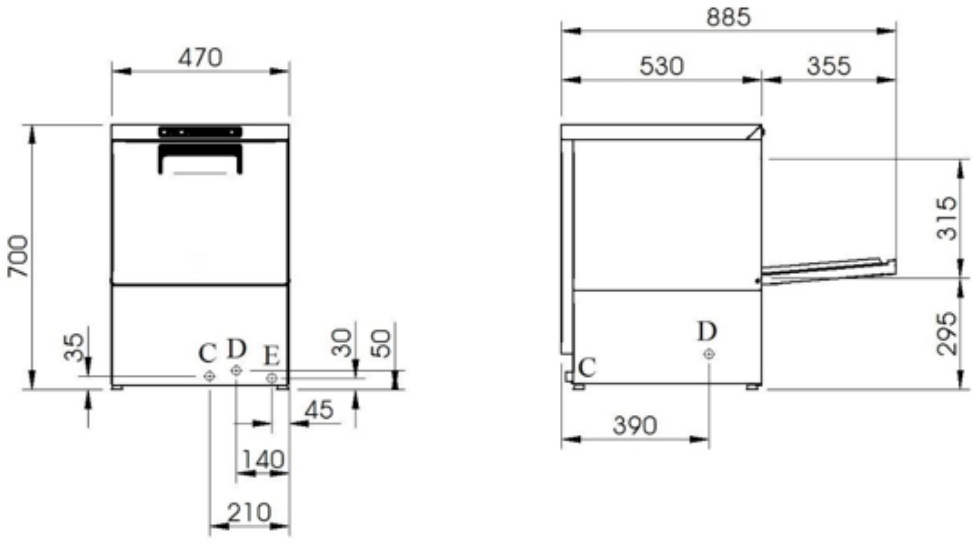

D = SCARICO 1", VIDANGE 1", DRAIN 1"; ABFLUSS 1"; DESAGÜE 1"; СЛИВ 1"
C = CARICAMENTO ACQUA ¾"; CHARGEMENT EAU ¾"; WATER INLET ¾"; ZUFLUSS ¾"; CARGA AGUA ¾"; ЗАЛИВКА ВОДЫ ¾"
E = ALLACCIAMENTO ELETTRICO ; BRANCHEMENT ELECTRIQUE; ELECTRIC CONNECTION; ELEKTRISCHER ANSCHLUSS; CONEXION ELECTRICA; ЭЛЕКТРИЧЕСКОЕ ПОДКЛЮЧЕНИЕ

VOLTAGGI DIVERSI E VERSIONI NAVALI DISPONIBILI SU RICHIESTA / DIFFÉRENTES TENSIONS ET VERSIONS MARITIMES DISPONIBLES SUR DEMANDE / DIFFERENT VOLTAGES AND MARINE VERSIONS AVAILABLE ON REQUEST / VERSCHIEDENE SPANNUNGEN UND SCHIFFSAUSFÜHRUNGEN AUF ANFRAGE ERHÄLTLICH / РАЗЛИЧНЫЕ НАПРЯЖЕНИЯ И ВАРИАНТЫ ИСПОЛНЕНИЯ КОРАБЛЯ - ПО ЗАПРОСУ